Mitsubishi CRJ-1000 (100Y)

Aircraft Detail



Member Airline of

IATA

era european regions airline association

November 2023

CRJ1000 Aircraft Data



Manufacturer	Mitsubishi (formerly Bombardier)
Type	CRJ1000
Series	CL-600-2E25
Type Certificate	Transport Canada A-276, EASA Data Sheet No. IM.A.023
Engines	2 x General Electric CF34-8C5
APU	Allied Signal RE-220 RJ

Maximum Take-off Weight	40,823 kg
Maximum Landing Weight	36,968 kg

Noise Certification Standard	ICAO Chapter 4
Lateral/Full Power Noise Level	89.1 EPNdB
Approach Noise Level	93.3 EPNdB
Flyover Noise Level	84.9 EPNdB

Maximum Cruise	0.82 Mach
Range (Max Payload)	1,650nm
T/O Field Length (MTOW)	1,876m
Landing Field Length (MLW)	1,750m
Aircraft Ceiling	41,000ft
ICAO Class	C

*Assumptions: ISA conditions; 100nm alternate; 30min holding @diversion altitude; pax@97kg

Capabilities	
Approach	CAT II (DH 100ft / RVR 350m)
Low Visibility Take Off/LVTO	RVR 125m
RVSM	Yes
PRNAV	Yes
ACARS	Yes
Dangerous Goods	Yes
AVIH	Yes

CityJet Approvals
IATA **IOSA**
Lufthansa Group Common Airline Risk Assessment (**CARA**)
UK Third Country Operator (**TCO**)

Dimensions and Baggage

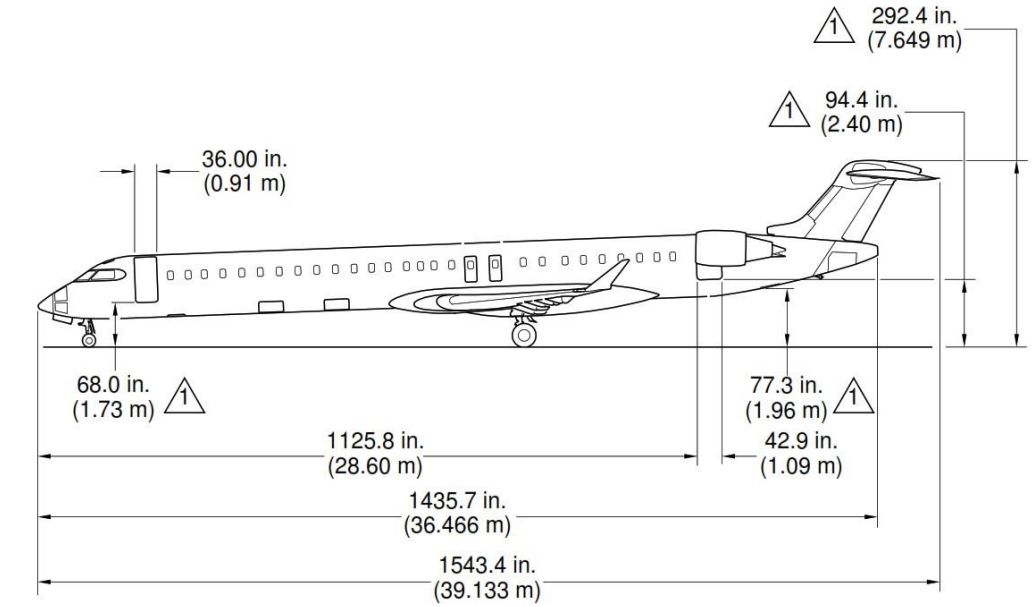

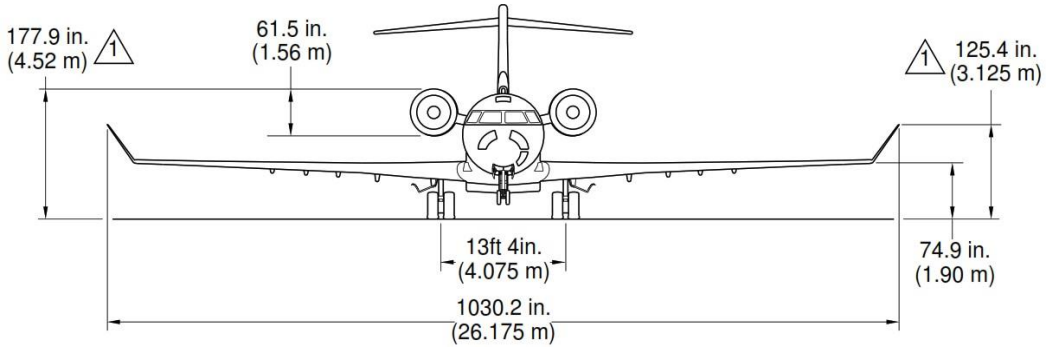

Hold	Max. Gross Weight [kg]	Maximum Volume [m³]
1	408 kg	1.7 m³
2	544 kg	2.3 m³
6	2003 kg	12.3 m³

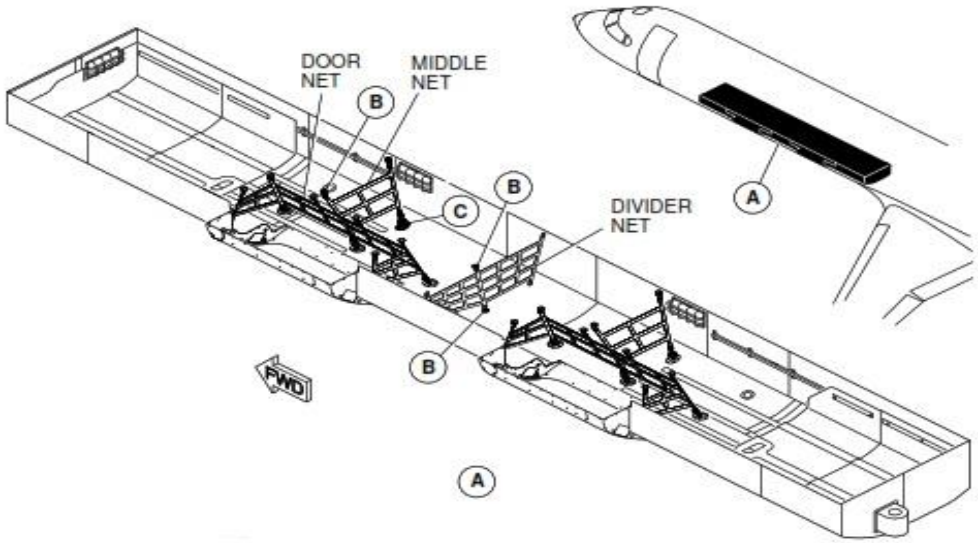

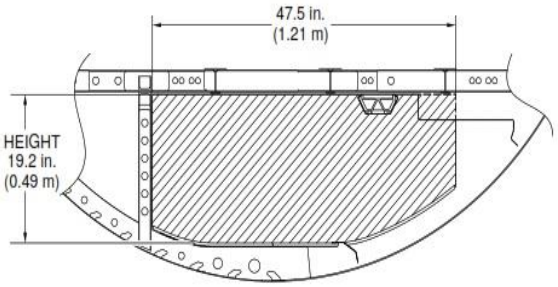
47.5 in.
(1.21 m)
HEIGHT
19.2 in.
(0.49 m)

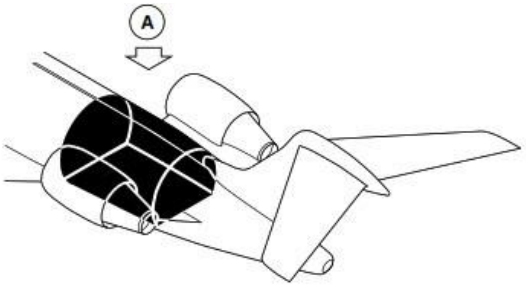
A

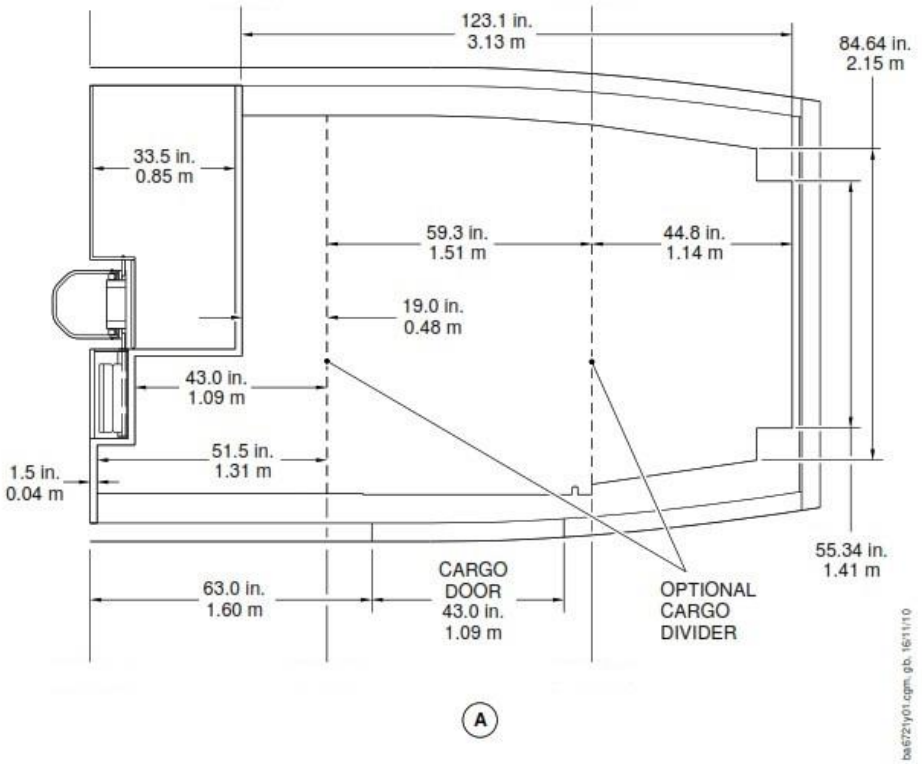
123.1 in.
3.13 m
84.64 in.
2.15 m
33.5 in.
0.85 m
59.3 in.
1.51 m
44.8 in.
1.14 m
19.0 in.
0.48 m
43.0 in.
1.09 m
51.5 in.
1.31 m
1.5 in.
0.04 m
55.34 in.
1.41 m
63.0 in.
1.60 m
CARGO
DOOR
43.0 in.
1.09 m
OPTIONAL
CARGO
DIVIDER
A
ba672typ01.cgm, gb, 16/11/10

Configuration - CRJ1000 – 100Y

Capacity: 100 passenger seats

Seat Row Labelling: AC DF

Cabin Attendant Seats: 2 (1 located in the forward cabin Entrance Compartment & 1 located on the aft cabin bulkhead).

Airstairs: 1 located at the forward left passenger door.

Emergency Exit seats: 16AC, 16DF, 17AC, 17DF.

Wheelchair passengers: Not to be seated in 1C, 2C or emergency exit seats.

Infants: Maximum of 8. Not to be seated in emergency exit seats. 3 drop down oxygen masks fitted above every double DF seat.

Unaccompanied Minors: Maximum of 6. Not to be seated in 1C, 2C or emergency exit seats.

Pet in cabin: Cats & Dogs permitted. Not to be seated in row 1AC or emergency exit seats.

Car seats: Permitted for infants up to 2 years old. Forward facing car seats only & must be secured using the passenger seat belt. Window seat only but not 1AC or emergency exit seats.

Baby Changing Tables: 1 in forward & 1 in aft lavatory.

Drop Down Oxygen Masks: 2 in each lavatory, 2 above each cabin attendant seat. 2 above AC. 3 above DF seats.

Ovens : No ovens.

Y100	Half Cart (Atlas)	Container (Atlas)	Water Boiler (Inventum)
G1	5	3	2
G2	5	2	
G3			
G4			
	10	**5**	**2**



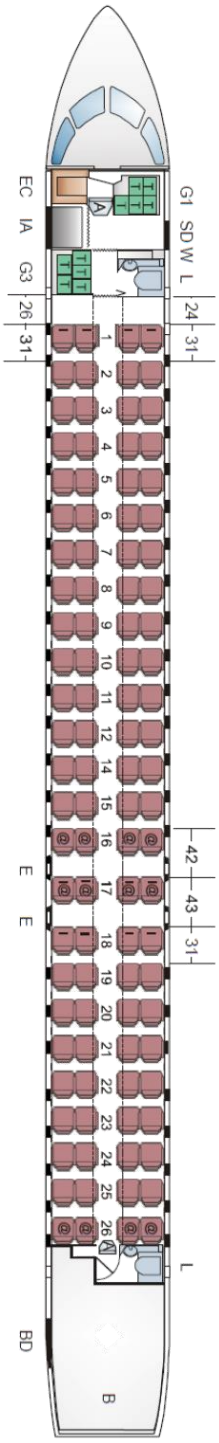

Legend	
A	Attendant Seat
B	Baggage Compartment
BD	Baggage Door
E	Overwing Exit
EC	Entrance Compartment
G1/G3	Galley 1 / Galley 3
I	With in-arm Table
IA	Airstair Door
L	Lavatory
OE	Overwing Exit
SD	Service Door
T	Half Size Trolley
W	Wardrobe
@	No Recline

CityJet Fleet Details

Registration	MSN	Date of Manufacture	Capacity	Current Livery
EI-HIA	19006	01/2011	Y100	White
EI-HIB	19012	03/2011		White
EI-HIC	19017	10/2011	Y100	White
EI-HID	19024	03/2012	Y100	White
EI-HIE	19010	02/2011	Y100	White



